crestar®

fan catalog

Hiro 3Blades 4

Altis+ 5Blades 12

Altis+ 3Blades 16

Airis+ 5Blades 20

Airis+ 3Blades 24

CONTENTS

NinjaAir 3Blades 28

ValueAir 5Blades 32

ValueAir 3Blades 36

LumiAir 3Blades 40

False Ceiling Installation 43

Extension Rod & Plate 44

Warranty T&Cs 46

Hiro 3Blades

42" 50" DC ABS

Hiro 3B - CSK178HG
with 22W Tri-Colour Dimmable LED

Size : 42 inch / 50 inch

Colour : Black

Price : $418 / $448

Hiro 3B - CSK178HG
with 22W Tri-Colour Dimmable LED

Size : 42 inch / 50 inch

Colour : White

Price : $418 / $448

Hiro 3B - CSK178HG
with 22W Tri-Colour Dimmable LED

Size : 42 inch / 50 inch

Colour : Walnut Wood

Price : $418 / $448

Hiro 3B - CSK178HG
with 22W Tri-Colour Dimmable LED

Size : 42 inch / 50 inch

Colour : Spectrum White

Price : $418 / $448

ABS CANOPY BLADES HOUSING

All listed price are subjected to prevailing GST.

Hiro 3Blades

42" 50" DC ABS

Hiro 3B - CSK178HG
with White Base Plate

Size : 42 inch / 50 inch

Colour : Black

Price : $368 / $398

Hiro 3B - CSK178HG
with White Base Plate

Size : 42 inch / 50 inch

Colour : White

Price : $368 / $398

Hiro 3B - CSK178HG
with White Base Plate

Size : 42 inch / 50 inch

Colour : Walnut Wood

Price : $368 / $398

Hiro 3B - CSK178HG
with White Base Plate

Size : 42 inch / 50 inch

Colour : Spectrum White

Price : $368 / $398

ABS CANOPY BLADES HOUSING

All listed price are subjected to prevailing GST.

Hiro 3Blades

42" 50" DC ABS

Hiro 3B - CSK178HG
with Black Base Plate

Size : 42 inch / 50 inch

Colour : Black

Price : $368 / $398

Hiro 3B - CSK178HG
with Black Base Plate

Size : 42 inch / 50 inch

Colour : White

Price : $368 / $398

Hiro 3B - CSK178HG
with Black Base Plate

Size : 42 inch / 50 inch

Colour : Walnut Wood

Price : $368 / $398

Hiro 3B - CSK178HG
with Black Base Plate

Size : 42 inch / 50 inch

Colour : Spectrum White

Price : $368 / $398

ABS BLADES CANOPY HOUSING

All listed price are subjected to prevailing GST.

Hiro 3Blades

42" 50" DC ABS

Hiro 3B - CSK178HG
with 22W Tri-Colour Dimmable LED

Size : 42 inch / 50 inch

Colour : Black

Price : $418 / $448

Hiro 3B - CSK178HG
with 22W Tri-Colour Dimmable LED

Size : 42 inch / 50 inch

Colour : White

Price : $418 / $448

Hiro 3B - CSK178HG
with 22W Tri-Colour Dimmable LED

Size : 42 inch / 50 inch

Colour : Walnut Wood

Price : $418 / $448

Hiro 3B - CSK178HG
with 22W Tri-Colour Dimmable LED

Size : 42 inch / 50 inch

Colour : Spectrum White

Price : $418 / $448

ABS CANOPY BLADES HOUSING

All listed price are subjected to prevailing GST.

Hiro 3Blades

42" 50" DC ABS

Hiro 3B - CSK178HG
with Black Base Plate

Size : 42 inch / 50 inch

Colour : Black

Price : $368 / $398

Hiro 3B - CSK178HG
with Black Base Plate

Size : 42 inch / 50 inch

Colour : White

Price : $368 / $398

Hiro 3B - CSK178HG
with Black Base Plate

Size : 42 inch / 50 inch

Colour : Walnut Wood

Price : $368 / $398

Hiro 3B - CSK178HG
with Black Base Plate

Size : 42 inch / 50 inch

Colour : Spectrum White

Price : $368 / $398

All listed price are subjected to prevailing GST.

Hiro 3Blades

42" 50" DC ABS

Hiro 3B - CSK178HG
with 22W Tri-Colour Dimmable LED

Size : 42 inch / 50 inch

Colour : Black

Price : $418 / $448

Hiro 3B - CSK178HG
with 22W Tri-Colour Dimmable LED

Size : 42 inch / 50 inch

Colour : White

Price : $418 / $448

Hiro 3B - CSK178HG
with 22W Tri-Colour Dimmable LED

Size : 42 inch / 50 inch

Colour : Walnut Wood

Price : $418 / $448

Hiro 3B - CSK178HG
with 22W Tri-Colour Dimmable LED

Size : 42 inch / 50 inch

Colour : Spectrum White

Price : $418 / $448

SPECIFICATIONS

	Hiro 3B CSK178HG/3B - 42"	Hiro 3B CSK178HG/3B - 50"
Diameter	42" (1067mm)	50" (1270mm)
Motor	Crestar Inverter DC Motor	
Weight	7.3kg	7.6kg
Material	Housing (Metal), ABS (Blades and Base Plate)	
Colour	Housing & Base Plate (Black / White) Blades (Black / White / Walnut Wood / Spectrum White)	
Voltage	AC 230V 50Hz	
Wattage (min/max)	8.5 / 43W	7.4W / 45W
RPM (min/max)	90 / 230 RPM	90 / 200 RPM
CFM (ft^3/min)	5254 ft^3/min	5779 ft^3/min
Speed	6 Speed	
Controls	6 Speed 2.4G Remote Control - KG27 & Mobile App Control (Smart Home Compatible)	
Lightkit	22W Tricolour LED with Dimmer Control	

LED 175	Warm	Cool	Day	Average
Lumens (lm)	2526	2658	2599	2594
Kevin (K)	2850	3969	6076	--

Fan Dimensions

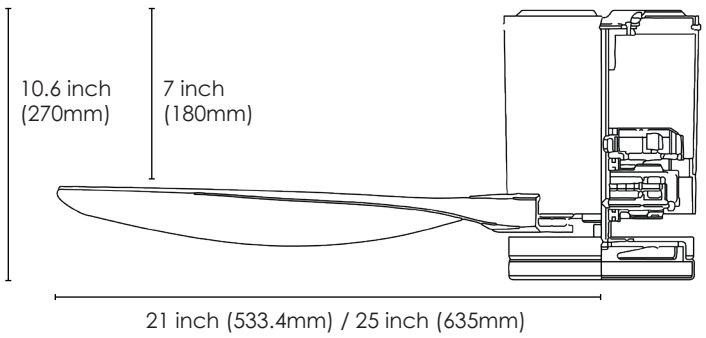

Mobile App Control Available:

Smart Life Tuya Smart

Download on the App Store GET IT ON Google Play

Altis+ 5Blades

Smart series

DC ABS ⌀48 ⌀54

works with the Google Assistant | WORKS WITH alexa

Altis+ 5B - CSLHG190/5B
with 22W Tri-Colour Dimmable LED

Size : 48 inch / 54 inch

Colour : Black

Price : $620 / $640

Altis+ 5B - CSLHG190/5B
with 22W Tri-Colour Dimmable LED

Size : 48 inch / 54 inch

Colour : White

Price : $620 / $640

Altis+ 5B - CSLHG190/5B
with 22W Tri-Colour Dimmable LED

Size : 48 inch / 54 inch

Colour : Walnut Wood

Price : $620 / $640

Altis+ 5B - CSLHG190/5B
with 22W Tri-Colour Dimmable LED

Size : 48 inch / 54 inch

Colour : Maple Wood

Price : $620 / $640

ABS CANOPY BLADES HOUSING

All listed price are subjected to prevailing GST.

Altis+ 5Blades

Smart series

DC ABS ⌀48 ⌀54

Altis+ 5B - CSLHG190/5B
with Base plate

Size : 48 inch / 54 inch

Colour : Black

Price : $570 / $590

Altis+ 5B - CSLHG190/5B
with Base plate

Size : 48 inch / 54 inch

Colour : White

Price : $570 / $590

Altis+ 5B - CSLHG190/5B
with Base plate

Size : 48 inch / 54 inch

Colour : Walnut Wood

Price : $570 / $590

Altis+ 5B - CSLHG190/5B
with Base plate

Size : 48 inch / 54 inch

Colour : Maple Wood

Price : $570 / $590

ABS CANOPY BLADES HOUSING

All listed price are subjected to prevailing GST.

SPECIFICATIONS

	Altis+ 5B CSLHG190/5B - 48"	Altis+ 5B CSLHG190/5B - 54"
Diameter	48" (1220mm)	54" (1372mm)
Motor	Crestar Inverter DC Motor	
Weight	6.1kg	6.5kg
Material	ABS (Canopy, Housing & Blades)	
Colour	Black / White / Walnut Wood / Maple Wood	
Voltage	AC 230V 50Hz	
Wattage (min/max)	4.8 / 31W	6.6 / 38W
RPM (min/max)	90 / 230 RPM	90 / 195 RPM
CFM (ft^3/min)	5990 ft^3/min	6630 ft^3/min
Speed	6 Speed	
Controls	6 Speed 2.4G Remote Control - LCD27 & Mobile App Control (Smart Home Compatible)	
Lightkit	22W Tricolour LED with Dimmer Control	

LED 191	Warm	Cool	Day	Average
Lumens (lm)	2044	2444	2276	2255
Kevin (K)	3006	4406	6286	--

Fan Dimensions

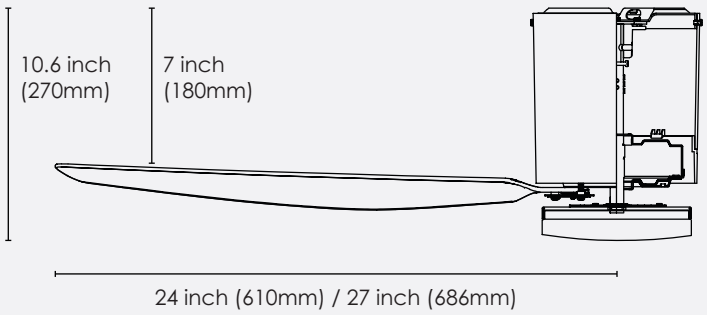

Mobile App Control Available:

Smart Life Tuya Smart

Download on the App Store GET IT ON Google Play

Altis+ 3Blades

Smart series

DC ABS ⌀40 ⌀46 ⌀52

works with the Google Assistant | WORKS WITH alexa

Altis+ 3B - CSLHG190/3B
with 22W Tri-Colour Dimmable LED

Size : 40 inch / 46 inch / 52 inch

Colour : Black

Price : $560 / $580 / $600

Altis+ 3B - CSLHG190/3B
with 22W Tri-Colour Dimmable LED

Size : 40 inch / 46 inch / 52 inch

Colour : White

Price : $560 / $580 / $600

Altis+ 3B - CSLHG190/3B
with 22W Tri-Colour Dimmable LED

Size : 40 inch / 46 inch / 52 inch

Colour : Walnut Wood

Price : $560 / $580 / $600

Altis+ 3B - CSLHG190/3B
with 22W Tri-Colour Dimmable LED

Size : 40 inch / 46 inch / 52 inch

Colour : Maple Wood

Price : $560 / $580 / $600

ABS CANOPY BLADES HOUSING

All listed price are subjected to prevailing GST.

Altis+ 3Blades

Smart series

DC ABS ⌀40 ⌀46 ⌀52

works with the Google Assistant | WORKS WITH alexa

Altis+ 3B - CSLHG190/3B
with Base plate

Size : 40 inch / 46 inch / 52 inch

Colour : Black

Price : $510 / $530 / $550

Altis+ 3B - CSLHG190/3B
with Base plate

Size : 40 inch / 46 inch / 52 inch

Colour : White

Price : $510 / $530 / $550

Altis+ 3B - CSLHG190/3B
with Base plate

Size : 40 inch / 46 inch / 52 inch

Colour : Walnut Wood

Price : $510 / $530 / $550

Altis+ 3B - CSLHG190/3B
with Base plate

Size : 40 inch / 46 inch / 52 inch

Colour : Maple Wood

Price : $510 / $530 / $550

ABS CANOPY BLADES HOUSING

All listed price are subjected to prevailing GST.

SPECIFICATIONS

	Altis+ 3B CSLHG190/3B - 40"	Altis+ 3B CSLHG190/3B - 46"	Altis+ 3B CSLHG190/3B Airis+ 52"
Diameter	40" (1016mm)	46" (1169mm)	52"(1321mm)
Motor	Crestar Inverter DC Motor		
Weight	4.8kg	5kg	5.2kg
Material	ABS (Canopy, Housing & Blades)		
Colour	Black / White / Walnut Wood / Maple Wood		
Voltage	AC 230V 50Hz		
Wattage (min/max)	3.9 / 20W	4.5 / 34W	4.8 / 36.3W
RPM (min/max)	90 / 280 RPM	90 / 280 RPM	90 / 230 RPM
CFM (ft^3/min)	4285 ft^3/min	4420 ft^3/min	5460 ft^3/min
Speed	6 Speed		
Controls	6 Speed 2.4G Remote Control - LCD27 & Mobile App Control (Smart Home Compatible)		
Lightkit	22W Tricolour LED with Dimmer Control		

LED 191	Warm	Cool	Day	Average
Lumens (lm)	2044	2444	2276	2255
Kevin (K)	3006	4406	6286	--

Fan Dimensions

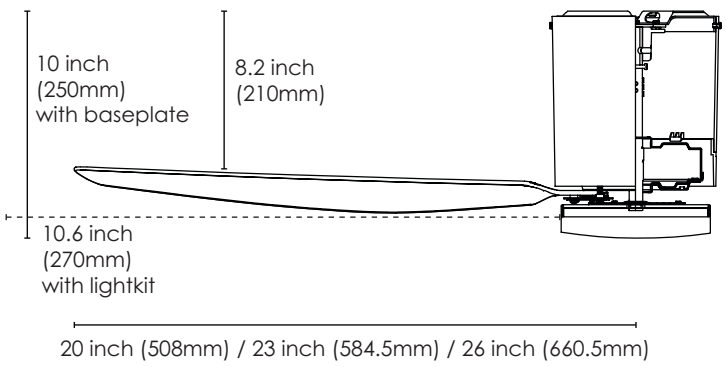

Mobile App Control Available:

Smart Life Tuya Smart

Download on the App Store GET IT ON Google Play

Airis+ 5Blades

Smart series

DC ABS ⌀50 ⌀56

works with the Google Assistant | WORKS WITH alexa

Airis+ 5B - CSL255/5B
with 25W Tri-Colour Dimmable LED

Size : 50 inch / 56 inch

Colour : Black

Price : $560 / $580

Airis+ 5B - CSL255/5B
with 25W Tri-Colour Dimmable LED

Size : 50 inch / 56 inch

Colour : White

Price : $560 / $580

Airis+ 5B - CSL255/5B
with 25W Tri-Colour Dimmable LED

Size : 50 inch / 56 inch

Colour : Walnut Wood

Price : $560 / $580

Airis+ 5B - CSL255/5B
with 25W Tri-Colour Dimmable LED

Size : 50 inch / 56 inch

Colour : Maple Wood

Price : $560 / $580

ABS CANOPY BLADES HOUSING

All listed price are subjected to prevailing GST.

Airis+ 5Blades

Smart series

DC ABS ⌀50 ⌀56

Airis+ 5B - CSL255/5B
with Base plate

Size : 50 inch / 56 inch

Colour : Black

Price : $500 / $520

Airis+ 5B - CSL255/5B
with Base plate

Size : 50 inch / 56 inch

Colour : White

Price : $500 / $520

Airis+ 5B - CSL255/5B
with Base plate

Size : 50 inch / 56 inch

Colour : Walnut Wood

Price : $500 / $520

Airis+ 5B - CSL255/5B
with Base plate

Size : 50 inch / 56 inch

Colour : Maple Wood

Price : $500 / $520

ABS
CANOPY · BLADES · HOUSING

All listed price are subjected to prevailing GST.

SPECIFICATIONS

	Airis+ 5B CSL255/5B - 50"	Airis+ 5B CSL255/5B - 56"
Diameter	50" (1270mm)	56" (1423mm)
Motor	Crestar Inverter DC Motor	
Weight	7.1kg	7.5kg
Material	ABS (Canopy, Housing & Blades)	
Colour	Black / White / Walnut Wood / Maple Wood	
Voltage	AC 230V 50Hz	
Wattage (min/max)	4.8 / 34W	7 / 45W
RPM (min/max)	90 / 230 RPM	90 / 195 RPM
CFM (ft^3/min)	6190 ft^3/min	6820 ft^3/min
Speed	6 Speed	
Controls	6 Speed 2.4G Remote Control - LCD27 & Mobile App Control (Smart Home Compatible)	
Lightkit	25W Tricolour LED with Dimmer Control	

LED 255	Warm	Cool	Day	Average
Lumens (lm)	2567	2733	2629	2278
Kevin (K)	2972	4157	6210	--

Fan Dimensions

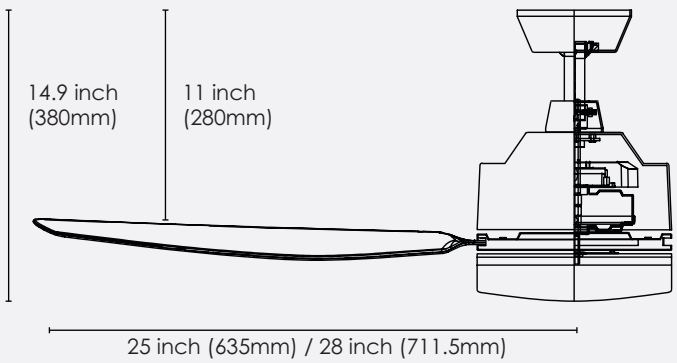

Mobile App Control Available:

Smart Life Tuya Smart

Download on the App Store GET IT ON Google Play

Airis+ 3Blades

Smart series

DC ABS ⌀42 ⌀48

works with the Google Assistant | WORKS WITH alexa

Airis+ 3B - CSL205/3B
with 22W Tri-Colour LED

Size : 42 inch / 48 inch

Colour : Black

Price : $500 / $520

Airis+ 3B - CSL205/3B
with Base Plate

Size : 42 inch / 48 inch

Colour : White

Price : $450 / $470

Airis+ 3B - CSL205/3B
with 22W Tri-Colour LED

Size : 42 inch / 48 inch

Colour : Walnut Wood

Price : $500 / $520

Airis+ 3B - CSL205/3B
with Base Plate

Size : 42 inch / 48 inch

Colour : Maple Wood

Price : $450 / $470

ABS CANOPY BLADES HOUSING

All listed price are subjected to prevailing GST.

Airis+ 3Blades

Smart series

DC ABS ⌀33

Airis+ 3B - CSL205/3B
with 22W Tri-Colour Dimmable LED

Size : 33 inch

Colour : Black

Price : $480

Airis+ 3B - CSL205/3B
with Base plate

Size : 33 inch

Colour : White

Price : $430

Airis+ 3B - CSL205/3B
with 22W Tri-Colour Dimmable LED

Size : 33 inch

Colour : Walnut Wood

Price : $480

Airis+ 3B - CSL205/3B
with Base plate

Size : 33 inch

Colour : Maple Wood

Price : $430

ABS CANOPY BLADES HOUSING

All listed price are subjected to prevailing GST.

SPECIFICATIONS

	Airis+ 3B CSL205/3B - 33"	Airis+ 3B CSL205/3B - 42"	Airis+ 3B CSL205/3B - 48"
Diameter	33" (839mm)	42" (1067mm)	48"(1220mm)
Motor	Crestar Inverter DC Motor		
Weight	6.3kg	6.4kg	6.5kg
Material	ABS (Canopy, Housing & Blades)		
Colour	Black / White / Walnut Wood / Maple Wood		
Voltage	AC 230V 50Hz		
Wattage (min/max)	3 / 14W	4.2 / 27W	4.5 / 22.4W
RPM (min/max)	90 / 280 RPM	90 / 280 RPM	90 / 250 RPM
CFM (ft³/min)	4020 ft³/min	4160 ft³/min	5260 ft³/min
Speed	6 Speed		
Controls	6 Speed 2.4G Remote Control - LCD27 & Mobile App Control (Smart Home Compatible)		
Lightkit	22W Tricolour LED with Dimmer Control		

LED 205	Warm	Cool	Day	Average
Lumens (lm)	2287	2225	2326	2278
Kevin (K)	2908	4010	6018	--

Fan Dimensions

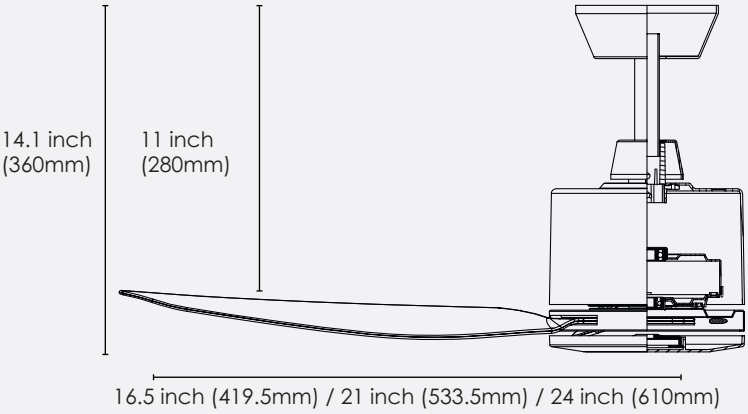

Mobile App Control Available:

Smart Life Tuya Smart

Download on the App Store GET IT ON Google Play

NinjaAir 3Blades

DC ABS ⌀42 ⌀48

NinjaAir - CSL175/3B
with 20W Tri-Colour LED

Size : 42 inch / 48 inch

Colour : Black

Special Price : $255 / $265
Usual Price : $430 / $450

NinjaAir - CSL175/3B
with 20W Tri-Colour LED

Size : 42 inch / 48 inch

Colour : White

Special Price : $255 / $265
Usual Price : $430 / $450

NinjaAir - CSL175/3B
with 20W Tri-Colour LED

Size : 42 inch / 48 inch

Colour : Wood

Special Price : $265 / $275
Usual Price : $450 / $470

All listed price are subjected to prevailing GST.

NinjaAir 3Blades

DC ABS ⌀42 ⌀48

NinjaAir - CSL175/3B
with Base plate

Size : 42 inch / 48 inch

Colour : Black

Special Price : $255 / $265
Usual Price : $430 / $450

NinjaAir - CSL175/3B
with Base plate

Size : 42 inch / 48 inch

Colour : White

Special Price : $255 / $265
Usual Price : $430 / $450

NinjaAir - CSL175/3B
with Base plate

Size : 42 inch / 48 inch

Colour : Wood

Special Price : $265 / $275
Usual Price : $450 / $470

All listed price are subjected to prevailing GST.

SPECIFICATIONS

	NinjaAir 3B CSL175/3B - 42"	NinjaAir 3B CSL175/3B - 48"
Diameter	42" (1067mm)	48" (1220mm)
Motor	Crestar Inverter DC Motor	
Weight	6.1kg	6.3kg
Material	Metal Alloy (Housing) ; ABS (Blades)	
Colour	Black / White / Wood	
Voltage	AC 230V 50Hz	
Wattage (min/max)	4.1 / 45W	5.2 / 41W
RPM (min/max)	90 / 280 RPM	90 / 230 RPM
CFM (ft^3/min)	5370 ft^3/min	4510 ft^3/min
Speed	6 Speed	
Controls	6 Speed 2.4G Remote Control - KG31	

Lightkit

20W Tricolour LED

LED 191	Warm	Cool	Day	Average
Lumens (lm)	2044	2444	2276	2255
Kevin (K)	3006	4406	6286	--

Fan Dimensions

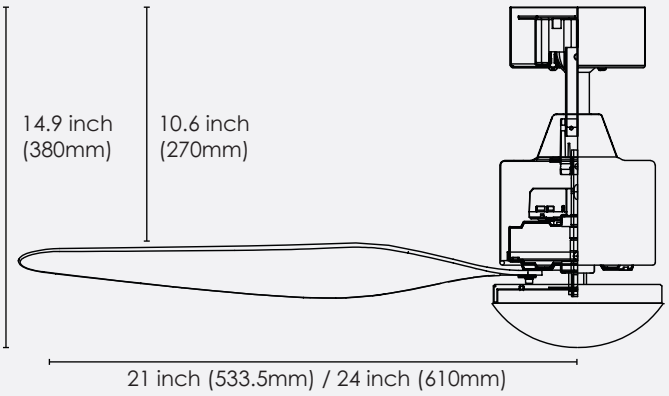

- 6 Speed Remote Control
- Timer Function 2H, 4H, 6H
- LED Tri-Colour Control (Day, Warm, Cool)
- Natural Wind Mode
- Forward / Reverse

* Latest Smart Led Control Function (Fast & Easy Color Change)

Behind the Scenes at DOWNTON ABBEY
SPA LIVING

ValueAir 5Blades

DC ABS ⌀48 ⌀55

ValueAir 5
with 20W Tri-Colour LED

Size : 48 inch / 55 inch

Colour : Black

Special Price : $265 / $275
Usual Price : $400 / $420

ValueAir 5
with 20W Tri-Colour LED

Size : 48 inch / 55 inch

Colour : White

Special Price : $265 / $275
Usual Price : $400 / $420

ValueAir 5
with 20W Tri-Colour LED

Size : 48 inch / 55 inch

Colour : Wood

Special Price : $290 / $300
Usual Price : $450 / $470

All listed price are subjected to prevailing GST.

ValueAir 5Blades

DC ABS ⌀48 ⌀55

ValueAir 5
with Base plate

Size : 48 inch / 55 inch

Colour : Black

Special Price : $265 / $275
Usual Price : $400 / $420

ValueAir 5
with Base plate

Size : 48 inch / 55 inch

Colour : White

Special Price : $265 / $275
Usual Price : $400 / $420

ValueAir 5
with Base plate

Size : 48 inch / 55 inch

Colour : Wood

Special Price : $290 / $300
Usual Price : $450 / $470

All listed price are subjected to prevailing GST.

SPECIFICATIONS

	ValueAir 5 - 48"	ValueAir 5 - 55"
Diameter	48" (1220mm)	55" (1400mm)
Motor	Crestar Inverter DC Motor	
Weight	7kg	7.2kg
Material	Metal Alloy (Housing) ; ABS (Blades)	
Colour	Black / White / Wood	
Voltage	AC 230V 50Hz	
Wattage (min/max)	5.7 / 36.8W	7.5 / 31.7W
RPM (min/max)	90 / 250 RPM	90 / 180 RPM
CFM (ft^3/min)	5980 ft^3/min	6290 ft^3/min
Speed	6 Speed	
Controls	6 Speed 2.4G Remote Control - KG31	

Lightkit

20W Tricolour LED

LED 191	Warm	Cool	Day	Average
Lumens (lm)	2044	2444	2276	2255
Kevin (K)	3006	4406	6286	--

Fan Dimensions

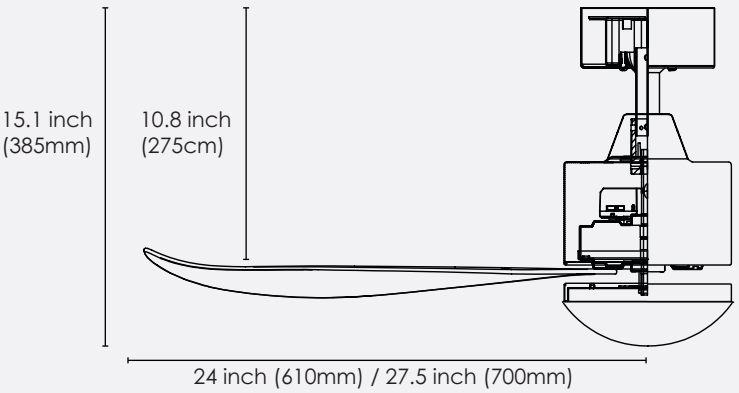

- 6 Speed Remote Control
- Timer Function 2H, 4H, 6H
- LED Tri-Colour Control (Day, Warm, Cool)
- Natural Wind Mode
- Forward / Reverse

* Latest Smart Led Control Function (Fast & Easy Color Change)

ValueAir 3Blades

DC ABS ⌀40 ⌀46

ValueAir 3
with 20W Tri-Colour LED

Size : 40 inch / 46 inch

Colour : Black

Special Price : $240 / $250
Usual Price : $360 / $380

ValueAir 3
with 20W Tri-Colour LED

Size : 40 inch / 46 inch

Colour : White

Special Price : $240 / $250
Usual Price : $360 / $380

ValueAir 3
with 20W Tri-Colour LED

Size : 40 inch / 46 inch

Colour : Wood

Special Price : $255 / $265
Usual Price : $390 / $410

All listed price are subjected to prevailing GST.

ValueAir 3Blades

DC ABS ⌀40 ⌀46

ValueAir 3
with Base plate

Size : 40 inch / 46 inch

Colour : Black

Special Price : $240 / $250
Usual Price : $360 / $380

ValueAir 3
with Base plate

Size : 40 inch / 46 inch

Colour : White

Special Price : $240 / $250
Usual Price : $360 / $380

ValueAir 3
with Base plate

Size : 40 inch / 46 inch

Colour : Wood

Special Price : $255 / $265
Usual Price : $390 / $410

All listed price are subjected to prevailing GST.

SPECIFICATIONS

	ValueAir 3 - 40"	ValueAir 3 - 46"
Diameter	40" (1020mm)	46" (1170mm)
Motor	Crestar Inverter DC Motor	
Weight	6.5kg	6.7kg
Material	Metal Alloy (Housing) ; ABS (Blades)	
Colour	Black / White / Wood	
Voltage	AC 230V 50Hz	
Wattage (min/max)	3.6 / 12.6W	4.8 / 27.5W
RPM (min/max)	90 / 280 RPM	90 / 280 RPM
CFM (ft^3/min)	3300 ft^3/min	4980 ft^3/min
Speed	6 Speed	
Controls	6 Speed 2.4G Remote Control - KG31	

Lightkit

20W Tricolour LED

LED 191	Warm	Cool	Day	Average
Lumens (lm)	2044	2444	2276	2255
Kevin (K)	3006	4406	6286	--

Fan Dimensions

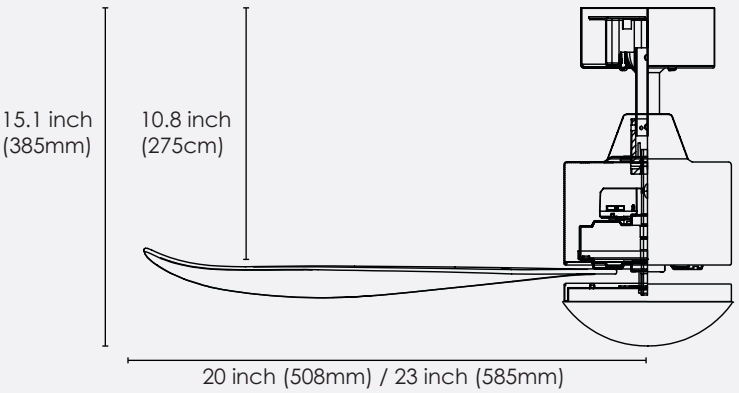

- 6 Speed Remote Control
- Timer Function 2H, 4H, 6H
- LED Tri-Colour Control (Day, Warm, Cool)
- Natural Wind Mode
- Forward / Reverse

* Latest Smart Led Control Function (Fast & Easy Color Change)

LumiAir 3Blades

DC ALU ⌀55

LumiAir 3B
with Base plate

Size : 55 inch

Colour : Black

Price : $280

Control: Wall Switch

LumiAir 3B
with Base plate

Size : 55 inch

Colour : White

Price : $280

Control: Wall Switch

All listed price are subjected to prevailing GST.

SPECIFICATIONS

	LumiAir 3B - 55"
Diameter	55" (1400mm)
Motor	Crestar Inverter DC Motor
Weight	6.4kg
Material	Metal Alloy (Housing) ; Aluminium (Blades)
Colour	Black / White
Voltage	AC 230V 50Hz
Wattage (min/max)	5.9 / 44.6W
RPM (min/max)	90 / 220 RPM
CFM (ft^3/min)	6910 ft^3/min
Speed	3 Speed
Controls	Wall Switch
Lightkit	---

Fan Dimensions

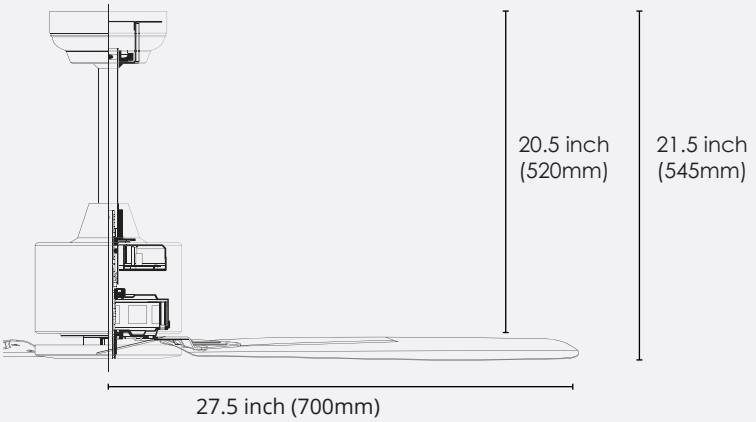

Controls

Wall Switch Control

- Single wall switch can control up to 6 fans
- Change speed by switching off and on within 5 seconds
- In-built memory of last used fan speed (if fan is switched off for more than 6 seconds)

FALSE CEILING INSTALLATION

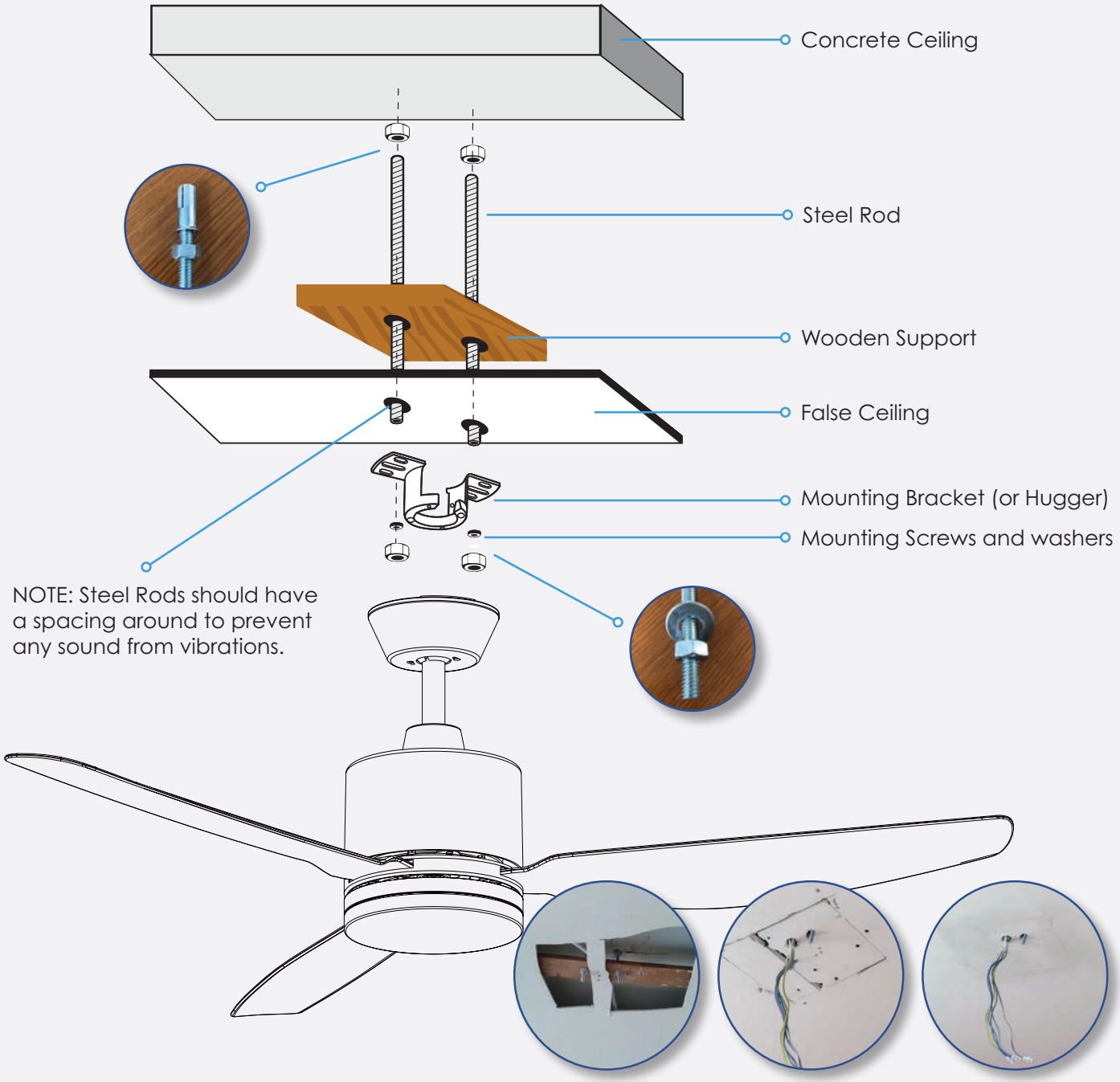

Example of internal support and patch up after

False Ceiling Installation Guide

The illustration above is just for reference purposes, kindly ensure you get professional help from our customer service centre.

Any damages or injuries as a result from improper installation will not be held responsible by Crestar. Make sure all false ceiling installation is carried out in accordance to our standards to prevent voiding your product warranty.

Extension Rod & Extension Plate - Models with downrod

For installation with high ceiling, Crestar's recommended extension method is as shown in this figure.

Adding an extension plate between the rod and the fan keeps the fan more stable and allows ease of maintenance in future as well.

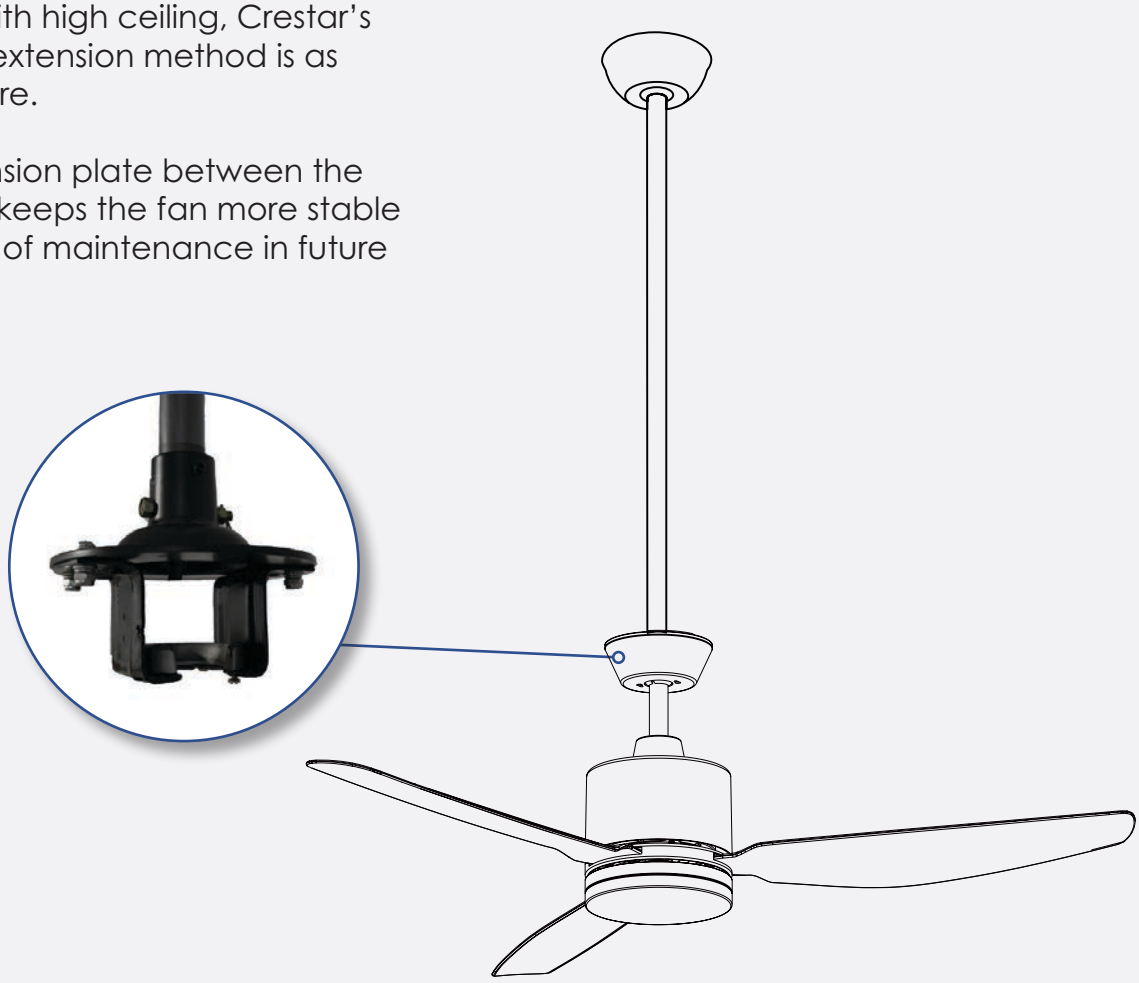

Ceiling Height	up to 3m	up to 3.4m	up to 3.6m	up to 4m	up to 4.5m	4.5m ≤
Downrod Length	4" - 8"	10" - 14"	15" - 18"	20" - 30"	40" - 60"	60" and above

additional extension plate + bracket needed

EXTENSION ROD & PLATE

Extension Rod & Extension Plate - Models with hugger

For models with hugger installation (no downrod) a similar extension plate can be used for high ceilings to allow the fan to be installed at the recommended height.

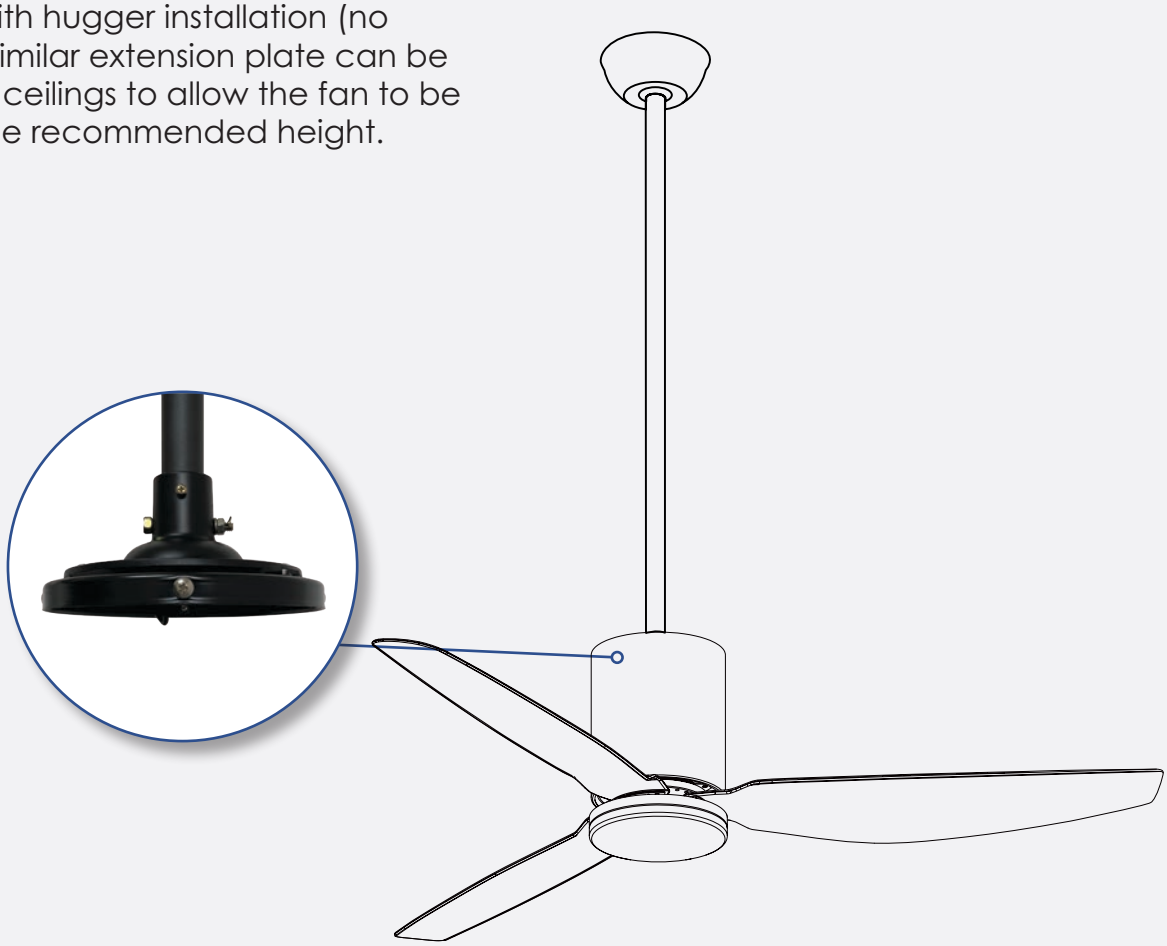

For any installation of 4m and above, on-site recce is required for our installation team to give the best advise for the height of the fan as well as the installation method.

It is strongly advised that ceiling height of 4m and above to use extension plate & bracket, in the event that no extension plate is being use, scaldfolding must be provided by the owner.

We at Crestar Enterprise Pte Ltd ("Crestar") are committed to deliver you our customers ("Customer") with carefully manufactured products.This product ("Product") has been tested and is in perfect working condition at the time of delivery. Visit www.crestarfan.com.sg for more information.

1. Requirements

1.1 The Customer is required to register this limited warranty ("Warranty") within 10 days from the date of original purchase ("Purchase") by (a) sending the filled up Warranty card by post to Crestar's address at 1 Tampines North Drive 1 #04-14 T-Space, Singapore 528559; OR (b) online registration using the following link www.crestarfan.com.sg/pages/warranty (and attaching the proof of Purchase at Crestar's discretion. The preferred mode of registration shall be duly updated by Crestar from time to time.

1.2 Crestar reserves its right to require the presentation of the original Warranty card and proof of Purchase. Crestar reserves its right to void the Warranty in case of altered, defaced or incomplete Warranty card. (where applicable)

2. Coverage

2.1 This Warranty covers (a) faulty materials and (b) manufacturing defects for a period of 1 year from Purchase (except for the fan motor which comes with 10 years warranty). ("Warranty Period") Crestar reserves its right to inspect and test the Product for the purpose of determining the extent of any defect and the validity of any claim made under this Warranty.

2.2 This Warranty covers purchases only in Singapore through Crestar or its authorised dealers.

2.3 This Warranty is applicable only to the original purchaser and is non-transferable, non-negotiable and cannot be assigned to any third party.

2.4 The installation of the Product must follow our instruction manual. Otherwise, the Warranty shall be void. This Warranty does not cover any noise or sound as a result of improper fan installation(s) on false ceiling. For installation/repairs of Products above 10 feet high; the Customer is required to pay additional fees of $50-$100. Scaffolding must be provided by the Customer when necessary.

2.5 The Product must be maintained in its original point of installation for the validity of the Warranty. Successive transfers of the Product may result to damage to the Product and its component.

2.6 The serial number of the Product must not be tampered with, erased, defaced or altered, otherwise the Warranty shall be void.

2.7 During the Warranty Period and subject to its verification, Crestar will:
a) Repair or replace the affected component(s) of any defective motor, spare parts, or accessories; and
b) Repair or replace the defective part(s).

In case of replacement of the affected component(s) or defective part(s), the said component(s) or part(s) shall become Crestar's property. For the avoidance of doubt, replacement of the Product to a new Product is only proper in cases where Crestar deems the Product as irreparable. Rest assured, in all instances, Crestar will exert its best efforts to repair the Product back to its working condition.

3. Exclusions

3.1 This Warranty does not cover the following:
a) due to normal wear and tear;
b) scratches, corrosion, rust, colour deteriorations, stains, dents, cracks, noise, balancing of fan, switch control, lighting bulbs, power point and power plug;
c) Product serviced or repaired other than by Crestar or its authorised representative;
d) Product replaced with components and parts not supplied by Crestar;
e) malfunction, losses, defects, or damage resulting from acts of god, civil unrest and or accidents;
f) malfunction, losses, defects, or damage resulting from tampering, mishandling, improper installation, improper use (including failing to do reasonable and necessary maintenance), negligence and modification to the Product; or
g) obstruction caused to access of electrical part(s)/product(s) (e.g. ceiling board / false ceiling);
h) damage caused by connecting the product to a dimmer, regulator, or IC control.
i) malfunction or damage from improper installation by third parties. Crestar recommends using its certified installation team.

4. Other Terms

4.1 Crestar will bear the cost of transport and service charge only within the first year of the Warranty Period. For servicing of the Product from second year onwards (i.e for the fan motor Warranty), the Customer will bear the cost of transport and service charge. Crestar reserves its right to impose additional charges for dismantling and re-installation of the Product when necessary. For servicing from the second year onwards due to causes other than fan motor defects, the Customer will bear the cost of transport, service charge and costs of components or parts.

4.2 Crestar will use reasonable commercial endeavours to have all necessary spare parts available for the purpose of the Warranty. However, Crestar shall not be liable for delays due to sourcing of parts which are required or due to circumstances beyond the control of Crestar.

4.3 Crestar disclaims any liability for any injury or damage to person, property or animal resulting from failure to comply with our instruction manual. Crestar disclaims any liability for consequential or incidental damages, due to product failure, whether arising out of breach of warranty, breach of contract or otherwise.

4.4 Crestar's decision on all questions relating to complaints as to defects either workmanship or materials shall be conclusive and the Customer agrees to abide by such a decision. The Warranty stated herein shall be limited within the Warranty Period.

4.5 Crestar recommends that the ceiling fan(s) should be check twice yearly for any loose and/or broken parts. Fees will apply accordingly.

4.6 It is recommended that the ceiling fan suspension should be inspected by Crestar at least once yearly. Fees will apply accordingly.

4.7 The terms and conditions of this Warranty shall be governed by and construed in accordance with the laws of the Republic of Singapore, and the Customer submits to the exclusive jurisdiction of the courts of Singapore in the determination of any matter or dispute arising in connection therewith.

crestar®

www.crestarfan.com.sg

Customer Hotline
6254 9483 / 6841 6413

Email
info@crestarfan.com.sg

Operating hours
Monday - Friday: 10am - 5pm
Saturday: 10am - 1pm

Address
1 Tampines North Drive 1 #04-14
T-Space S528559

Technology Behind The Breeze